22 Series – Ceramic Machining
SPANKING TOOLS

Type of Tool: 22-00X-XXX
Material: Ceramic
Surface Treatment: Nil

Application:
The ceramic spanker tool is used on soft solder die bonding and they are primarily used for power devices production. Our ceramic spanker tools have out performed the existing spanker tools made out of tungsten carbide, alloy steel, titanium materials. Our ceramic made spanker tool spanked over the adhesive to make the form with a minimal sticking of adhesive over a longer duration of stamping. Frequent cleaning of the adhesive form is lesser, the bonding machines have less stoppage and more production units are obtained using our ceramic made spanking tool.

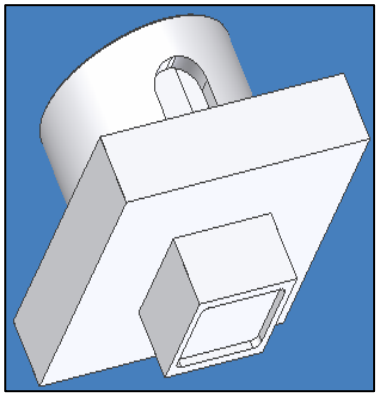

P/N: 22-005-XXX
SPANKER TOOL - ESEC

Delivery: 1-2 weeks.
Packing: 1 pc per vile. **Minimum order:** 1 pc.

Ordering Code	Description	Reference
	ESEC MACHINE	
22 – 005 - XXX	SPANKER TOOL – ESEC.	S -
	NEC MACHINE	
22 – 006 - XXX	SPANKER TOOL – NEC.	S -

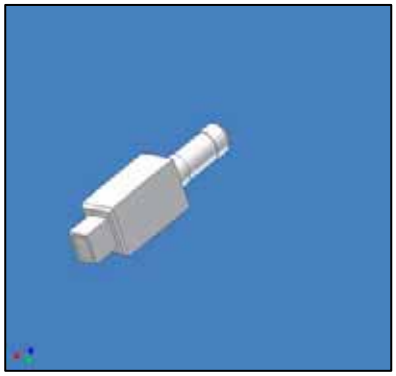

P/N: 22-006-XXX
SPANKER TOOL - NEC

* Please contact us for other machine models not shown above.